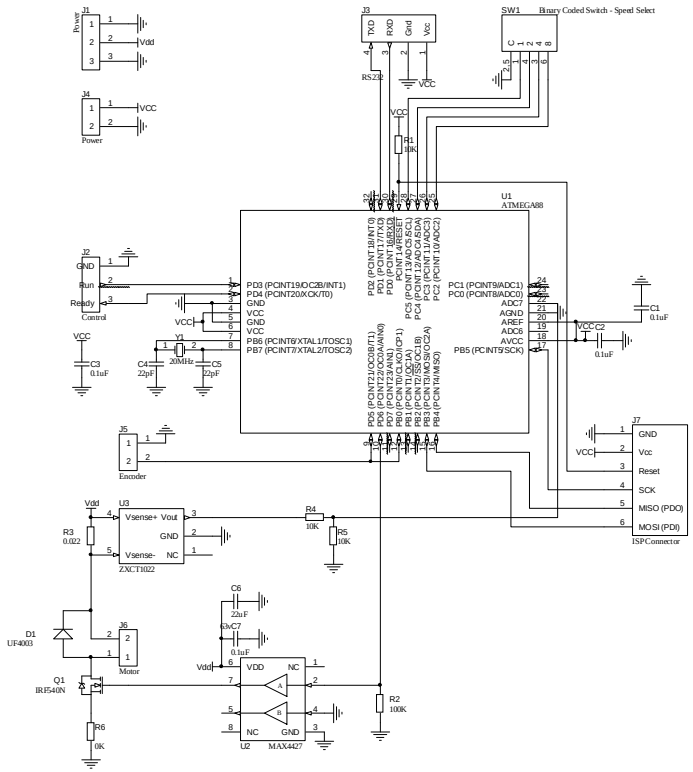
J1
Power
Vdd
J4
VCC
Power
J3
TXD
RXD
Gnd
Vcc
RS232
VCC
SW1
Binary Coded Switch - Speed Select
R1
10K
U1
ATMEGA88
J2
GND
Run
Ready
Control
VCC
C3
0.1uF
C4
22pF
Y1
20MHz
C5
22pF
PD3 (PCINT19/OC2B/INT1)
PD4 (PCINT20/XCK/T0)
GND
VCC
GND
VCC
PB6 (PCINT6/XTAL1/TOSC1)
PB7 (PCINT7/XTAL2/TOSC2)
PD2 (PCINT18/INT0)
PD1 (PCINT17/TXD)
PD0 (PCINT16/RXD)
PC6 (PCINT14/RESET)
PC5 (PCINT13/ADC5/SCL)
PC4 (PCINT12/ADC4/SDA)
PC3 (PCINT11/ADC3)
PC2 (PCINT10/ADC2)
PC1 (PCINT9/ADC1)
PC0 (PCINT8/ADC0)
ADC7
AGND
AREF
ADC6
AVCC
PB5 (PCINT5/SCK)
PD5 (PCINT21/OC0B/T1)
PD6 (PCINT22/OC0A/AIN0)
PD7 (PCINT23/AIN1)
PB0 (PCINT0/CLKO/ICP1)
PB1 (PCINT1/OC1A)
PB2 (PCINT2/SS/OC1B)
PB3 (PCINT3/MOSI/OC2A)
PB4 (PCINT4/MISO)
C1
0.1uF
VCC C2
0.1uF
J5
Encoder
J7
GND
VCC
Vcc
Reset
SCK
MISO (PDO)
MOSI (PDI)
ISPConnector
Vdd
U3
Vsense+
Vout
GND
Vsense-
NC
ZXCT1022
R3
0.022
R4
10K
R5
10K
C6
22uF
C7
0.1uF
D1
UF4003
J6
Motor
Q1
IRF540N
R6
0K
VDD
NC
NC
GND
U2
MAX4427
R2
100K